REVISION TABLE					
REV	ECN#	DESCRIPTION	REV BY	APPROVED	DATE
---	---	Original Drawing	SDC	MPW	7-23-15

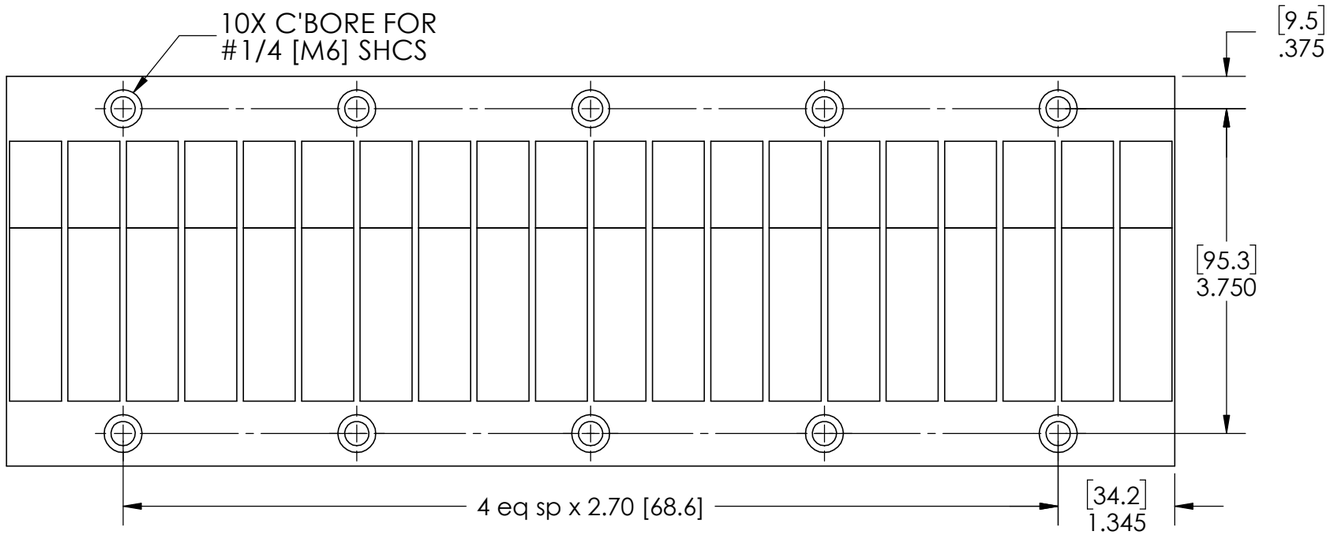

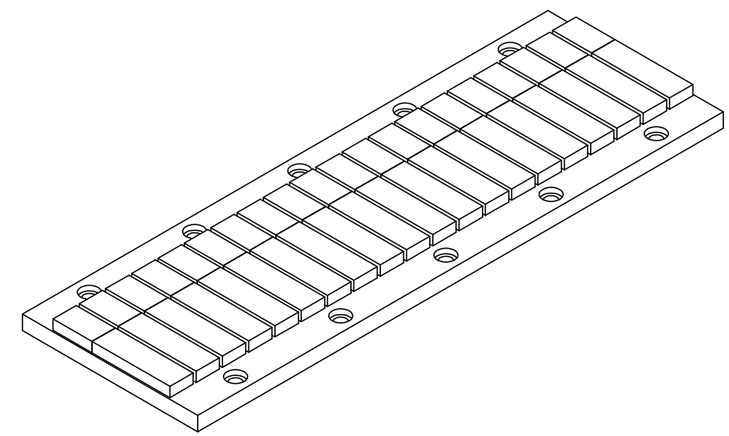

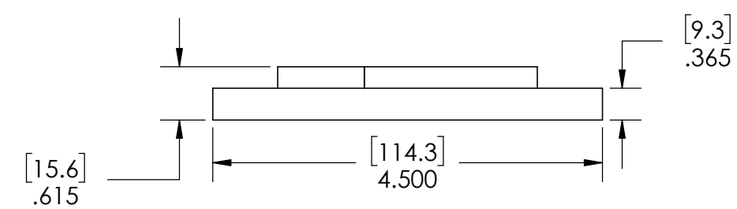

H2W Technologies, Inc.
Santa Clarita, CA 91350 USA
Tel: (661) 291-1620
www.h2wtech.com

These drawings and specifications are the property of H2W Technologies, Inc. They are issued in confidence and shall not be reproduced, copied, or used without written permission from H2W Technologies, Inc.

UNLESS SPECIFIED OTHERWISE:
All dimensions are in inches
Standard Tolerances are as follows

.XXX	±.005	ANGLES	±.1°
.XX	±.010	FILLETS	.010
.X	±.020	CORNERS	.010

Remove All Burrs and Sharp Edges

FOR REFERENCE ONLY

MATERIAL

FINISH

TITLE
Iron Core Magnet Track Model #:
BLST-C13

DWG # **21-0157**
REV **----**
DATE 7-23-15
SHEET 1 of 1